PART NO. 31 000 011

PARTS LIST			
ITEM	QTY	PART NUMBER	DESCRIPTION
1	2	02 000 008	LINESTAKE, 3/8" VINYL
2	2	02 000 096	RIVET, 3/16 x 9/32
3	4	02 000 104	NUT, 1/4-20 CAGE
4	4	02 000 228	WASHER, 1/4 EXT TOOTH SS
5	16	02 000 230	GROMMET, PANEL INSERT NYLON
6	4	02 000 380	BOLT, 1/4-20 x 3/4 SS
7	4	02 000 381	WASHER,1/4 FLAT SS
8	8	02 000 398	SCREW, 14 x 3/4 SLT HEX WSHR SS
9	22	02 000 543	SCREW, 10 x 1/2 HEX WSHR TEK SS
10	1	03 000 076	COIL, COND 16 x 23, 106
11	1	05 000 283	TUBE ASSY, LEFT 106
12	1	05 000 284	TUBE ASSY, RIGHT 106
13	2	06 000 319	BRKT, MTG 106 UNIT
14	2	06 000 322	BRKT, TUBE MTG 106
15	1	06 000 323	BRACE, CASE TOP 106
16	1	06 000 970	HOUSING, BOTTON 106
17	1	06 000 971	HOUSING, FAN 106
18	2	07 000 546	CAP, #8 PLAST. 3/4-16 W/SEAL, B
19	2	08 000 008	O-RING, #8 13/32
20	2	11 000 147	FAN, 11" PULLER 12V

MOUNT INFO

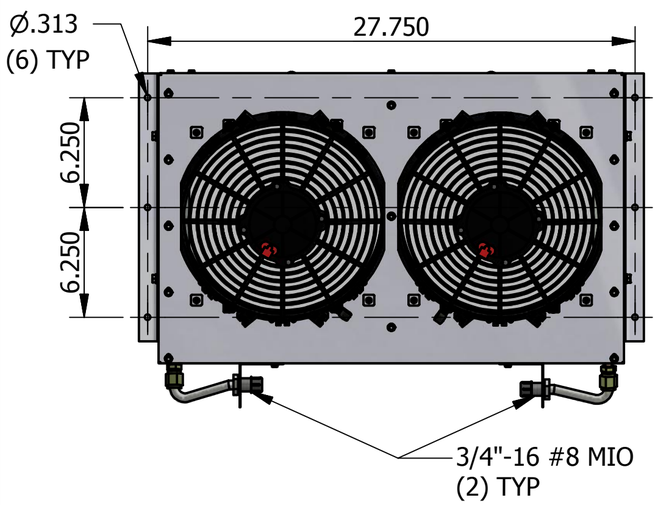

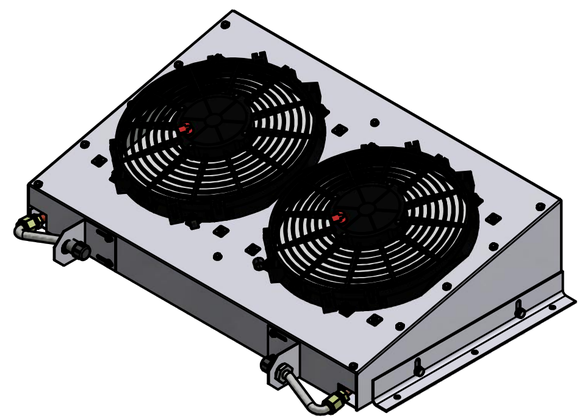

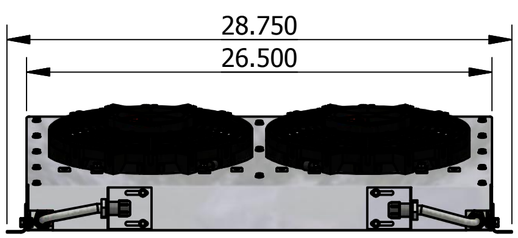

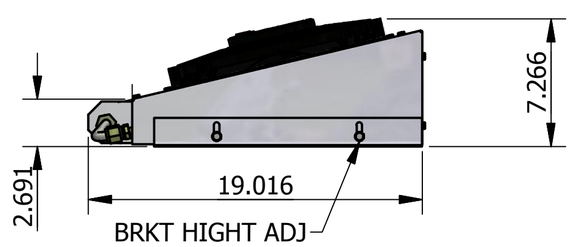

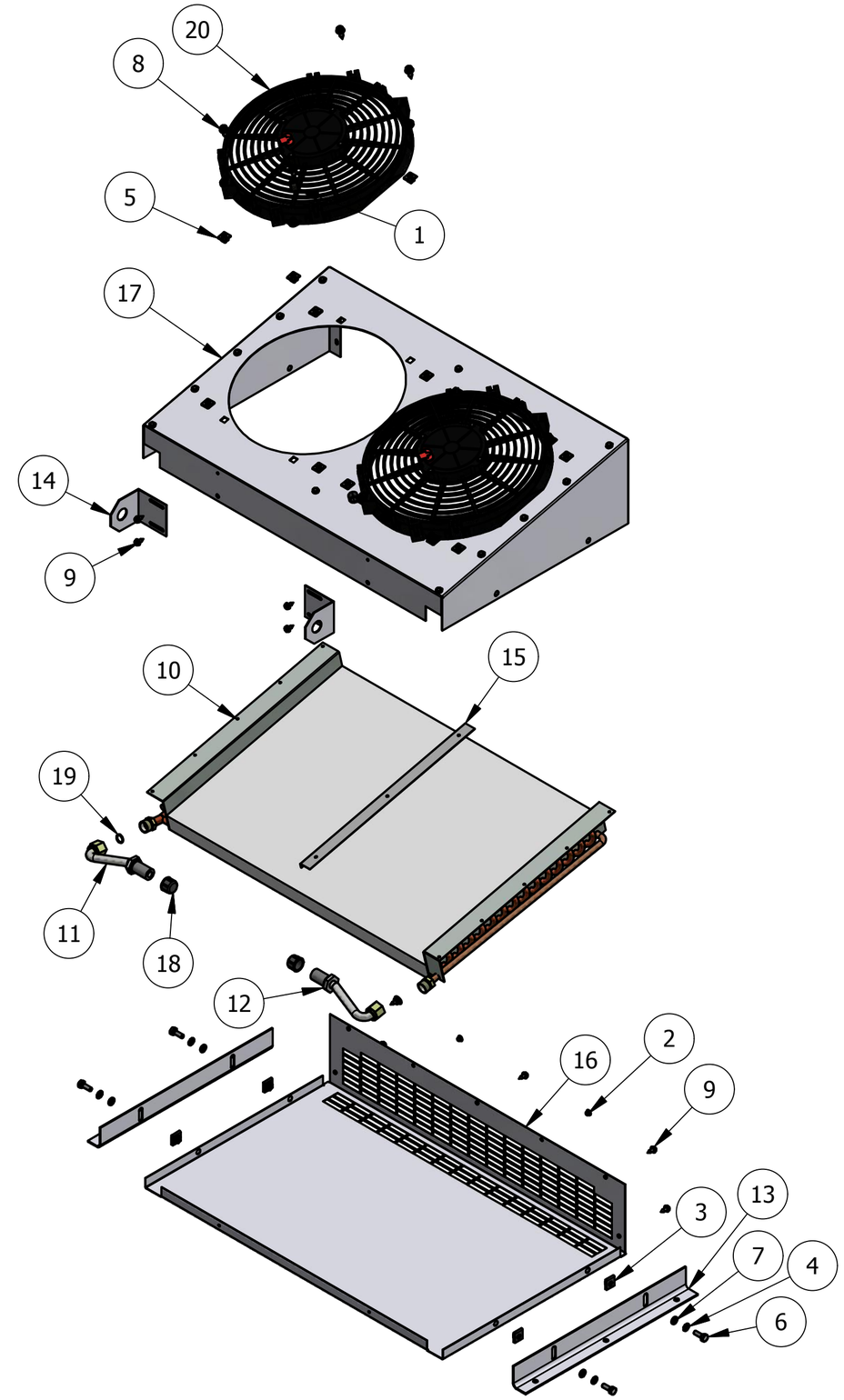

PROPRIETARY & CONFIDENTIAL. UNPUBLISHED WORK COPYRIGHT PROTECTED PRO AIR LLC. PRO AIR, LLC CLAIMS PROPRIETARY RIGHTS IN THE MATERIAL DISCLOSED HEREON. NEITHER THIS DRAWING NOR ANY REPRODUCTION OR PORTION THEREOF MAY BE DISTRIBUTED OR USED TO MANUFACTURE ANYTHING SHOWN HEREON WITHOUT PERMISSION IN WRITING FROM PROAIR, LLC.

REV. A

LET.	NO.	REVISION	BY	DATE
A	18-090	RELEASED TO PRODUCTION	CEB	4/11/18

SIGNATURES		DATE
DRAWN	CEB	4/11/18
CHECKED	RAI	4/11/18
APPROVED		

PROAIR®
2900 COUNTY RD 6 W ELKHART, IN 46514

TITLE: CONDENSER, 106 ROOF MTG

USAGE: ALL

PART NO. 31 000 011

SCALE: .15 : 1 SIZE A

SHEET 1 OF 1