PARTS LIST			
ITEM	QTY	PART NUMBER	DESCRIPTION
1	1	01 000 272	HARN, 2 FAN CONDENSER
2	4	02 000 159	NUT, 10-32 SCR/FLG LOCK
3	8	02 000 490	WASHER, 6mm
4	4	02 000 499	SCREW, 10-32 x 5/8 HEX MACHINE
5	2	02 000 503	SPACER, NYLON 1/2" OD x 1/2" LG
6	8	02 000 531	NUT, 1/4-20 NYLON LOCK, SS
7	2	02 000 533	NUT,10-24 NYLON LOCK SS
8	10	02 000 543	SCREW, 10 x 1/2 HEX WSHR TEK SS
9	2	02 000 659	SPACER, NYLON 1/2" OD x 5/8" LG
10	1	03 000 221	COIL, COND MC 15.5 x 27.5 x .71
11	1	06 001 646	BRKT, COND. BTM FAN MTG
12	1	06 001 647	BRKT, COND. TOP FAN MTG
13	4	06 001 648	BRKT, COND. SIDE MOUNT
14	2	06 001 649	BRKT, COND. TRANS COOLER
15	2	11 000 251	FAN, 11" PUSHER 12v FEMALE WP

PART NO. 31 000 097

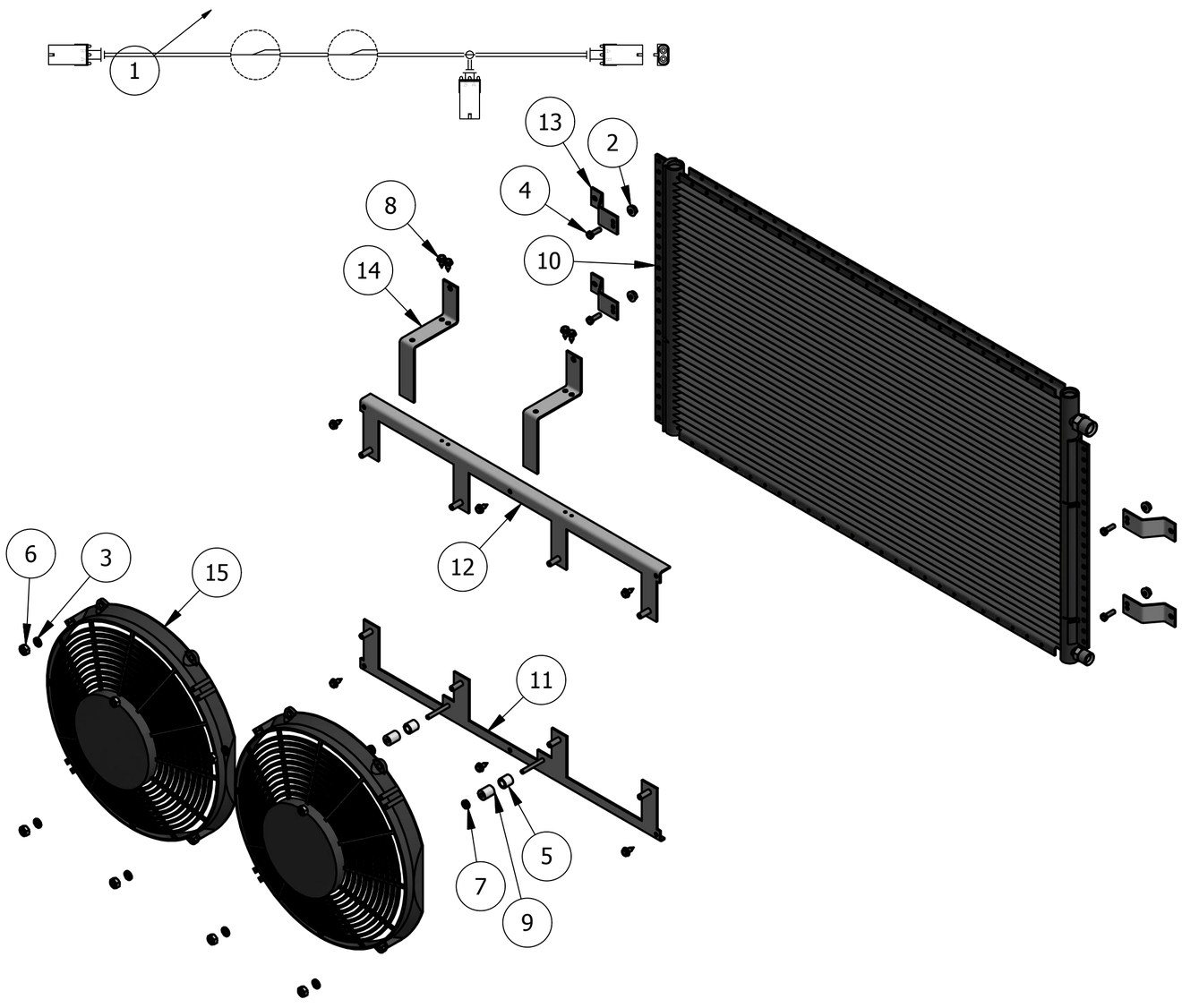

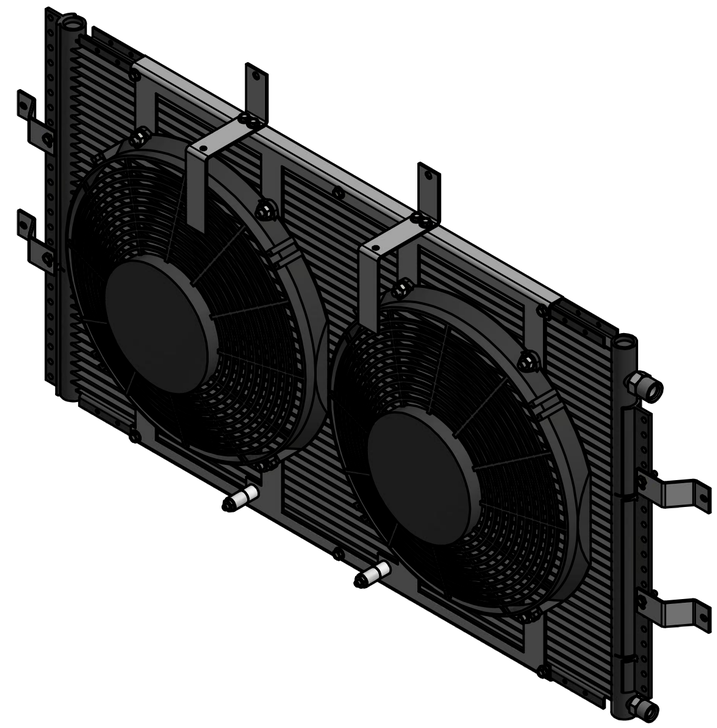

MOUNT INFO

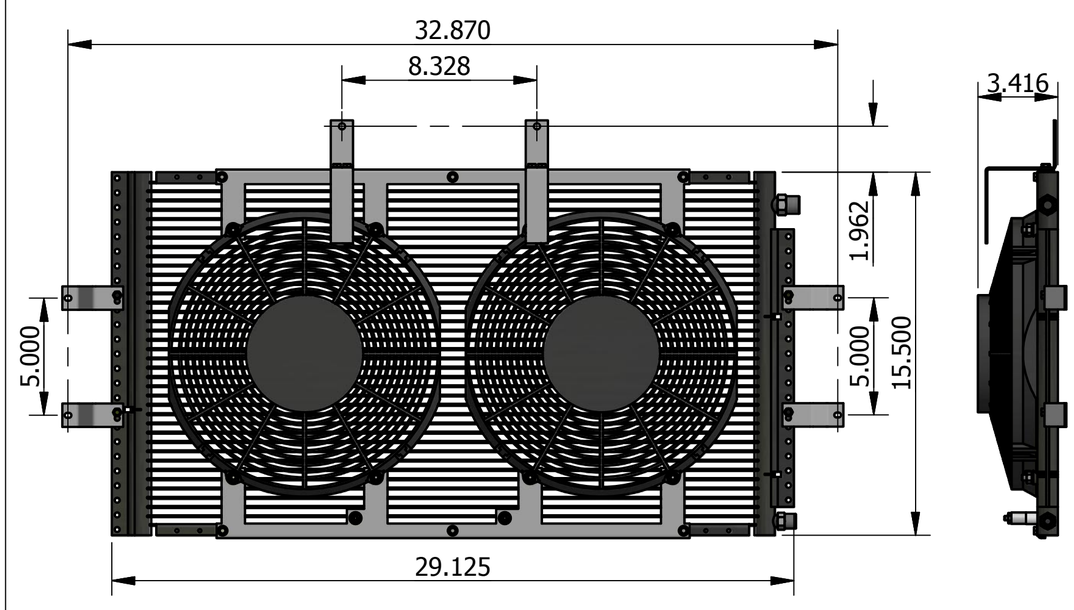

PROPRIETARY & CONFIDENTIAL. UNPUBLISHED WORK COPYRIGHT PROTECTED PRO AIR LLC. PRO AIR, LLC CLAIMS PROPRIETARY RIGHTS IN THE MATERIAL DISCLOSED HEREON. NEITHER THIS DRAWING NOR ANY REPRODUCTION OR PORTION THEREOF MAY BE DISTRIBUTED OR USED TO MANUFACTURE ANYTHING SHOWN HEREON WITHOUT PERMISSION IN WRITING FROM PROAIR, LLC.

REV. A

LET.	NO.	REVISION	BY	DATE
A	18-090	RELEASED TO PRODUCTION	CEB	4/23/18

SIGNATURES		DATE
DRAWN	CEB	4/23/18
CHECKED	RAI	4/23/18
APPROVED		

PRO AIR®
2900 COUNTY RD 6 W ELKHART, IN 46514

TITLE: CONDENSER, GM W/2 11" FANS

USAGE: ALL

PART NO. 31 000 097

SCALE: .2 : 1 SIZE A

SHEET 1 OF 1