PART NO. 66 000 434

PARTS LIST			
ITEM	QTY	PART NUMBER	DESCRIPTION
1	1	01 000 027	SWITCH, 4-POS SHORT SHAFT
2	1	01 000 589	KNOB, .250 x .160 FLAT TO BOT
3	1	01 000 738	HARN, 3 SPEED
4	2	02 000 056	GROMMET, 1/2" ID 5/8" OD
5	4	02 000 066	BOLT, 1/4-20 x 5/8 HEX BLK SEMS
6	4	02 000 104	NUT, 1/4-20 CAGE
7	1	02 000 118	NUT, 7/16-28 PN'L ZINC
8	39	02 000 597	SCREW, 10-24 x 5/8 BLK TYPE 23 T
9	1	03 000 167	COIL, A/C PLATE-FIN 9.25 x 9
10	1	05 000 141	VALVE, EXPAN P-NUT 2 TON
11	1	06 001 134	PLENUM, TOP
12	1	06 001 164	BRKT, LH DRAIN PAN
13	1	06 001 166	PAN, DRAIN
14	1	06 001 168	BRKT, RH DRAIN PAN
15	1	06 001 563	HOUSING, 330 TOP MOTOR MOUNT
16	1	06 001 564	HOUSING, 330 MAIN
17	1	06 001 565	PLATE, 330 TOP ACCESS PNL
18	1	06 001 566	PLATE, 330 BTM ACCESS PNL
19	1	06 001 567	GRILL, FILTER RETAIN 9 3/4 x 12
20	4	06 001 568	BRKT, 330 MOUNTING 4.75"
21	1	08 000 008	O-RING, #8 13/32
22	1	09 000 386	DECAL, FAN SPEED
23	1	11 000 156	BLOWER ASSY, 12v DBL SM W/SP RE
24	2	11 000 179	LOUVER, RECT 1 1/2 x 3 3/4 x 5

MOUNT INFO

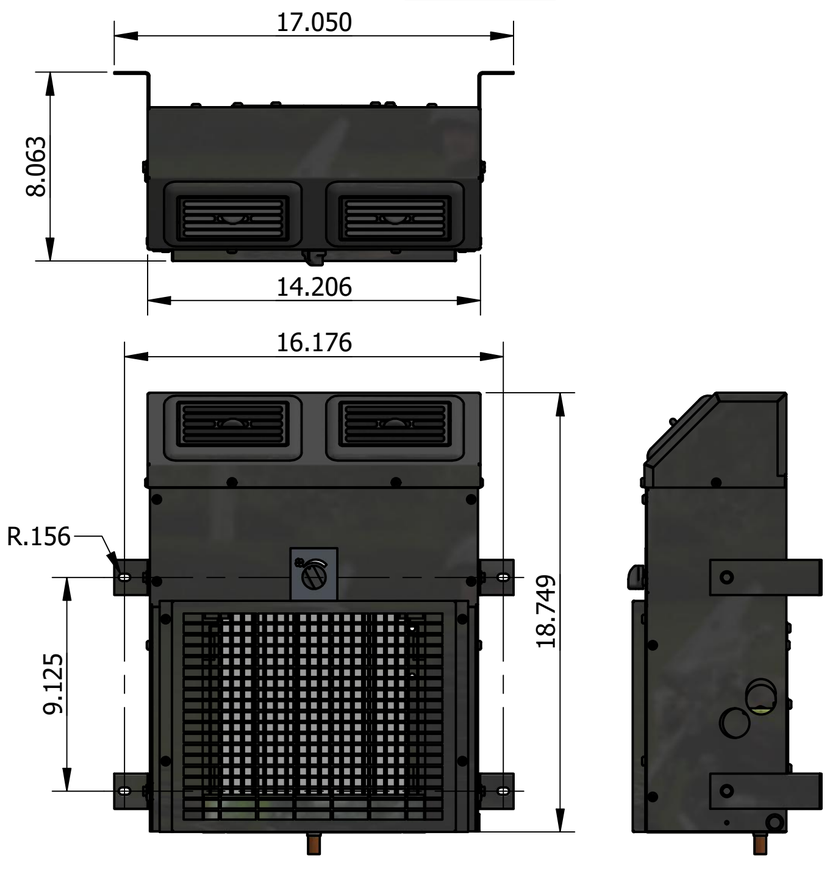

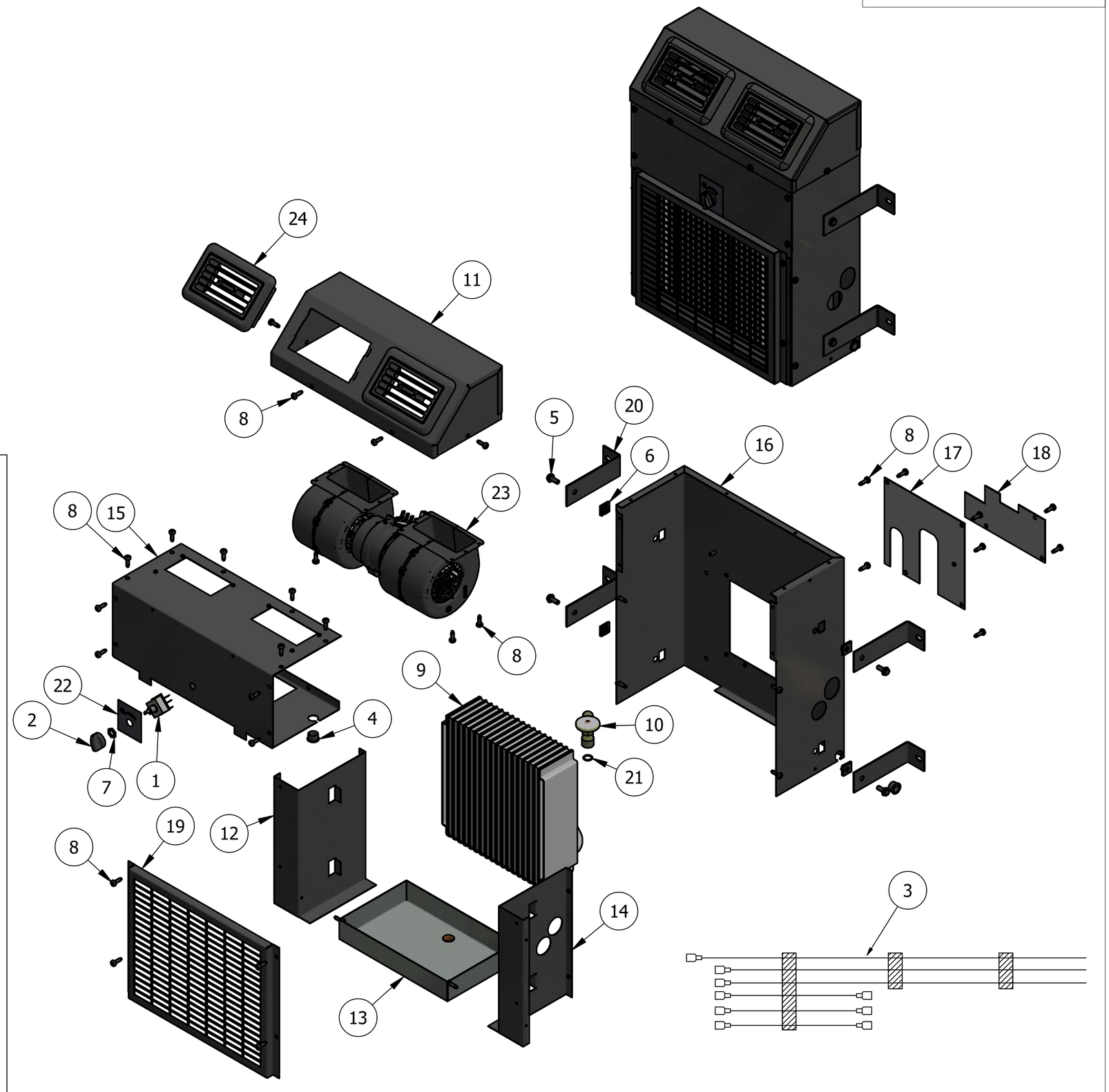

PROPRIETARY & CONFIDENTIAL. UNPUBLISHED WORK COPYRIGHT PROTECTED PRO AIR LLC. PRO AIR, LLC CLAIMS PROPRIETARY RIGHTS IN THE MATERIAL DISCLOSED HEREON. NEITHER THIS DRAWING NOR ANY REPRODUCTION OR PORTION THEREOF MAY BE DISTRIBUTED OR USED TO MANUFACTURE ANYTHING SHOWN HEREON WITHOUT PERMISSION IN WRITING FROM PROAIR, LLC.

REV. A

LET.	NO.	REVISION	BY	DATE
A	18-232	RELEASED TO PRODUCTION	CEB	11/12/18

SIGNATURES		DATE
DRAWN	CEB	11/12/18
CHECKED	RAI	11/12/18
APPROVED		

PRO AIR®
2900 COUNTY RD 6 W ELKHART, IN 46514

TITLE: FRIGIKING, 330 COOL ONLY

USAGE: ALL

PART NO. 66 000 434

SCALE: .2 : 1 SIZE A

SHEET 1 OF 1